Section A

Attachments

Service Manual - Backhoe Loader

Section 1 - General Information

Section 2 - Care and Safety

Section 3 - Maintenance

Section A - Attachments

Section B - Body and Framework

Section C - Electrics

Section D - Controls

Section E - Hydraulics

Section F - Transmission

Section G - Brakes

Section H - Steering

Section K - Engine

Section L - Servo Controls



Publication No.
9803/3290-14



Copyright © 2004 JCB SERVICE. All rights reserved. No part of this publication may be reproduced, stored in a retrieval system, or transmitted in any form or by any other means, electronic, mechanical, photocopying or otherwise, without prior permission from JCB SERVICE.

Issued by JCB Technical Publications, JCB Aftermarket Training, Woodseat, Rocester, Staffordshire, ST14 5BW, England. Tel +44 1889 591300 Fax +44 1889 591400

World Class
Customer Support

Notes:

Contents **Page No.**

Hi-Flow Rockbreaker Circuit
Operation Overview A-1
Gearpump Machines A-1
Gearpump Machines from September 2007 ..... A-5
Variflow Machines A-9
Precision Control (Servo) Machines A-11
Connecting/Disconnecting Hydraulic Hoses A-15
Introduction A-15
Connecting the Hydraulic Hoses A-15
Disconnecting the Hydraulic Hoses A-16
Quick Release Couplings A-17
Changing the Return Line Filter - if fitted A-19

Hydraulic Tool Circuit (HTC)
Operation Overview A-20
Gearpump Machines with Extending Dipper A-20
Electrical Connections A-23
NOT Servo Machines A-23
Precision Control (Servo) Machines A-25
Connecting/Disconnecting Hydraulic Hoses A-27
Introduction A-27
Connecting the Hydraulic Hoses A-27
Disconnecting the Hydraulic Hoses A-28
Quick Release Couplings A-29
Flow Diverter Valve A-31
Removal and Replacement A-31
Dismantle and Assemble A-33
Flow and Pressure Testing A-35

3 Point Hitch (214e Landscaper)
Removal and Replacement A-37
Control Valve A-37
Operating Rams A-39

Contents **Page No.**

Hi-Flow Rockbreaker Circuit

Operation Overview

Gearpump Machines

The rockbreaker circuit is activated by operating the auxiliary hydraulics selector switch in the side console, and then depressing the auxiliary footpedal in the cab.

Note: *On sideshift machines, the hydraclamps selector switch in the side console must also be in the `OFF' position (clamps engaged) before the rockbreaker can be operated.*

⇨ ***Fig 1. (A-2)***. On the hi-flow rockbreaker circuit there are two hydraulic feed lines **F1** and **F2** to the rockbreaker attachment **10**.

The oil flow for the F1 feed is derived from the pump secondary section (P2) via the steer priority valve **2**. When the footpedal is depressed, the spool in the auxiliary valve **5** directs the oil to the rockbreaker (Feed F1) through port A.

The oil flow for the F2 feed is derived from the pump main section (P1). When the footpedal is depressed, a proximity switch (not shown) situated below the footpedal signals the rockbreaker solenoid valve **6** to energise, thereby closing off the normal return path to tank (neutral circuit) and directing the oil flow to the rockbreaker (Feed F2) through the sequence valve **7**. Note that the manual shut-off valve **8** should be set to the `closed' position for rockbreaker operation as shown, preventing the oil flow returning back to tank through the auxiliary valve.

The changeover solenoid valve **9** is energised when the auxiliary hydraulics selector switch in the side console is pressed. The valve isolates the hydraulic feed to the extending dipper ram **11** (head side) through port A1, and re-directs the flow to operate the rockbreaker through port B1. Consequently this also prevents the dipper from being extended during rockbreaker operation.

Return oil from the rockbreaker attachment is routed directly back to tank.

For details of the electrical circuit and connections. ⇨ ***Wires and Connectors (A-3)***.

Component Key:

1	Hydraulic Pump
2	Steer Priority Valve
3	Loader Valve Block
4	Excavator Valve Block (6 spool)
5	Auxiliary Valve (extending dipper)
6	Solenoid Valve
7	Sequence Valve
8	Shut-off Valve
9	Solenoid Valve (hammer or ext. dipper changeover)
10	Rockbreaker
11	Extending Dipper Ram
12	Hydraulic Tank
F1	Feed Line 1
F2	Feed Line 2

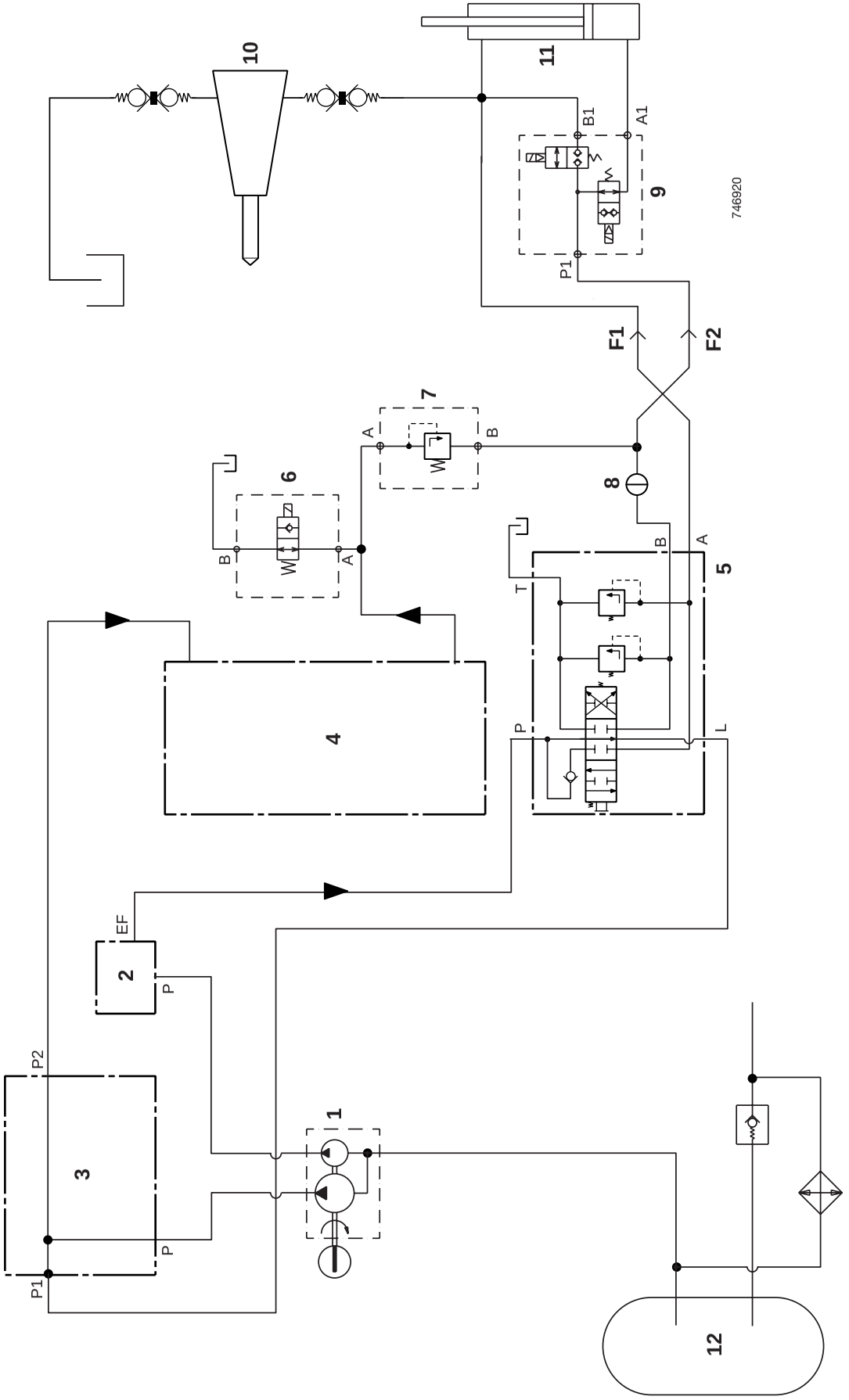

Fig 1. Gearpump Machines with Extending Dipper upto September 2007

Wires and Connectors

⇒ *Fig 2. (A-4)*. On the electrical diagram the electrical connectors (example, C10 to G) are shown looking on the mating face of each connector when they are disconnected.

The wire numbers and colours, where appropriate, are shown as an aid to identification whilst fault finding.

Before fault finding make sure that you understand how the electrical circuits work.

Earth Points

Faults may be caused by poor earth connections. Although earth connections are shown, it must be remembered that the cab assembly is earthed via further earth strap and cable connections. For details of these connections refer to ***Section C, Machine Earth Connections***.

Component Key:

The following key identifies the component connectors on the electrical diagram. Note that the wires coloured red show the electrical `live feed'. The wires coloured green show the electrical `return to earth'. For harness drawings refer to ***Section C, Harness Data***.

h1	Harness - Cab
h2	Harness - Auxiliary Hydraulics
h3	Harness - Hammer Change-over (machines with extending dippers only)

Connectors (h1)

CCA	Fusebox A
CP	Hammer Relay
DK	Auxiliary Hydraulics Selector Switch
DL	Hydraclamp Selector Switch
DR1	Earth point
DR2	Earth point
DR3	Earth point
G	h1 - h2

Connectors (h2)

C10	h2 - h1
C20	Hammer Valve Solenoid
C50	Proximity Switch (auxiliary footpedal)
C60	h2 - h3

Connectors (h3)

HB	h3 - h2
HC	Change-over Valve Solenoid
HD	Change-over Valve Solenoid

Splices (h1)

SB
SC
SH
SM
TH

Splices (h2)

S10
S20

Splices (h3)

SA
SB

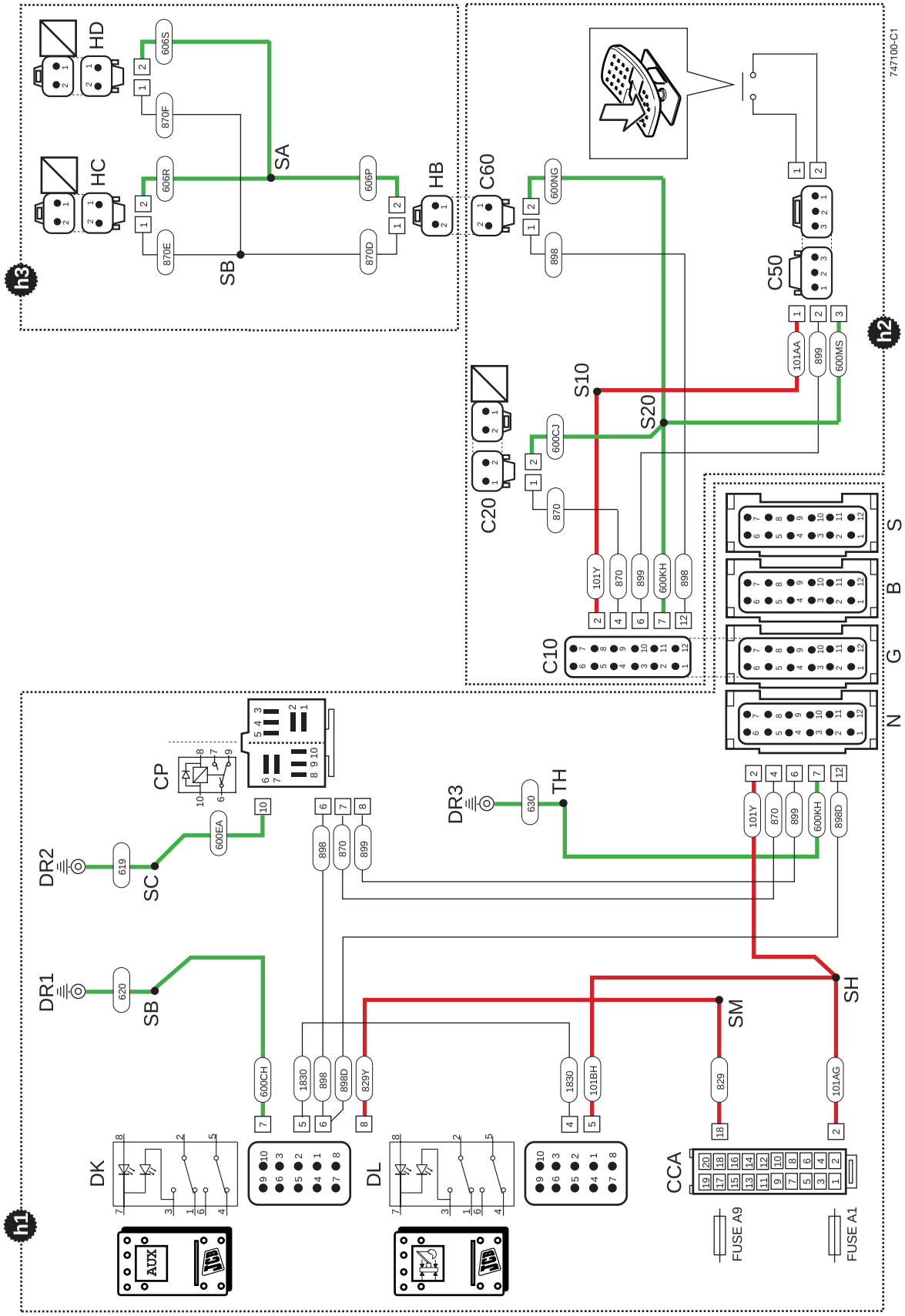

Fig 2. Gearpump Machines with Extending Dipper upto September 2007

Gearpump Machines from September 2007

Note: *This rockbreaker circuit is a completely independent circuit and is not connected to the extending dipper circuit.*

The rockbreaker circuit is activated by operating the hammer selector switch (3-position switch) in the side console, and then pressing the foot switch mounted in the cab floor.

Note: *On sideshift machines, the hydraclamps selector switch in the side console must also be in the `OFF' position (clamps engaged) before the rockbreaker can be operated.*

⇒ ***Fig 3. (A-6)***. To allow rockbreaker attachments with different hydraulic flow requirements to be used, the circuit can be operated with either single pump flow, or with double pump flow as required.

Single Pump Flow: When the hammer selector switch in the side console is set to single pump operation, the Hydraulic Speed Control (HSC) circuit is also activated automatically. In this way, the oil flow from the pump secondary section P2 (via the steer priority valve **2**) is dumped directly back to tank by the unloader valve housed in the loader valve block **3**. The oil flow for the rockbreaker feed is derived from the pump main section P1 only.

When the foot switch is pressed, the switch contacts signal the hammer solenoid valve **6** to energise, thereby closing off the normal return path to tank (neutral circuit) and directing the oil flow to the rockbreaker **7**.

Double Pump Flow: When the hammer selector switch is set to double pump operation, the HSC circuit is not activated. This means that the oil flow for the rockbreaker feed is derived from both pump sections, main section P1 and secondary section P2 combined.

When the foot switch is pressed, the switch contacts signal the hammer solenoid valve **6** to energise, thereby closing off the normal return path to tank (neutral circuit) and directing the oil flow to the rockbreaker **7**.

Return oil from the rockbreaker attachment is routed through the hydraulic oil cooler **10** and back to tank. The return line incorporates a small nitrogen charged accumulator **9** to smooth out any hydraulic pressure pulses that may be generated in the return line pipework by the rockbreaker attachment.

For details of the electrical circuit and connections. ⇒ ***Wires and Connectors (A-7)***.

Component Key:

1 Hydraulic Pump
2 Steer Priority Valve
3 Loader Valve Block
4 Excavator Valve Block (6 spool)
5 Auxiliary Valve (extending dipper)
6 Solenoid Valve
7 Rockbreaker
8 Extending Dipper Ram
9 Accumulator
10 Oil Cooler
11 Hydraulic Tank

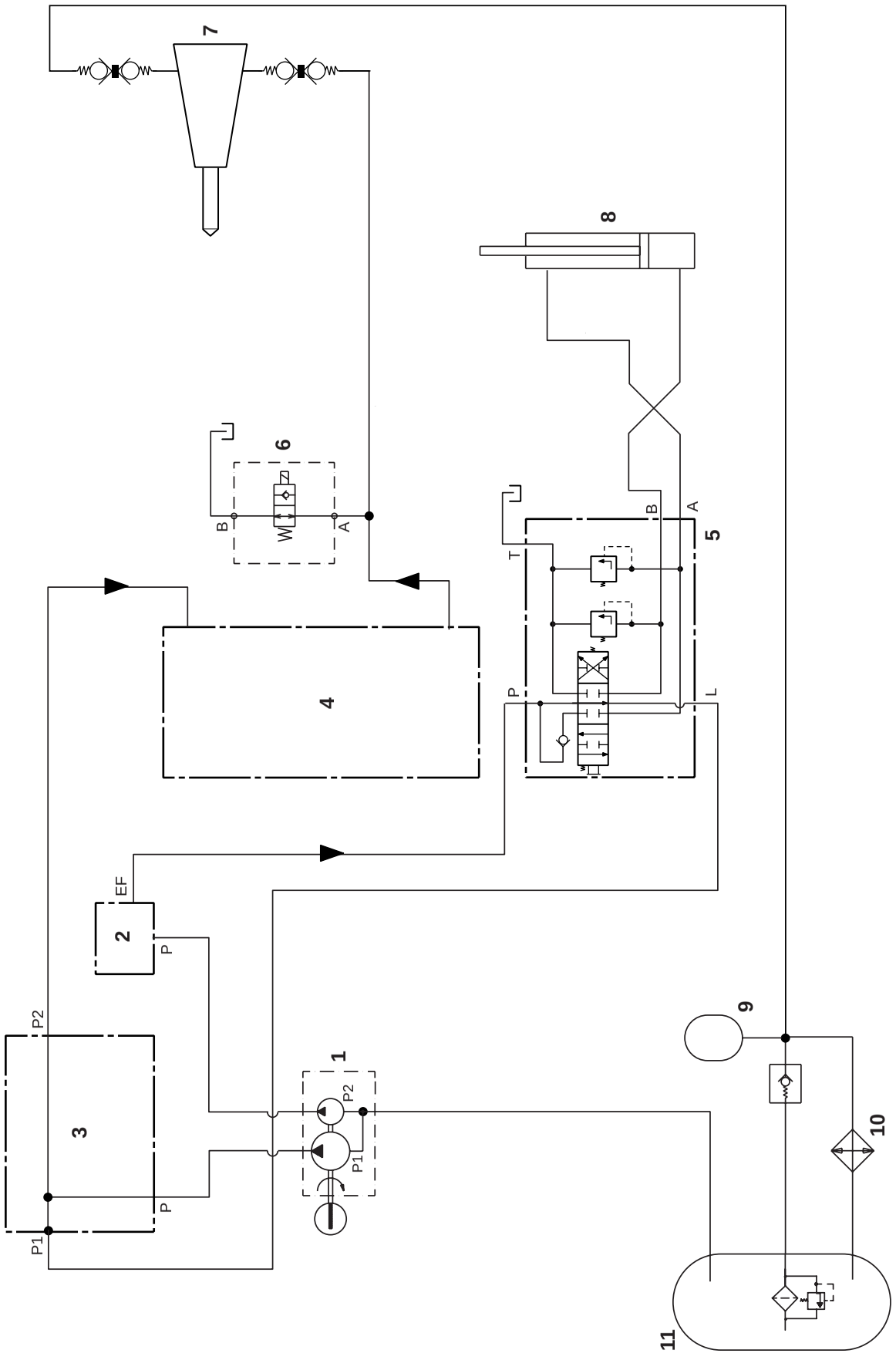

Fig 3. Gearpump Machines with Extending Dipper from September 2007

Wires and Connectors

⇒ *Fig 4. (A-8)*. On the electrical diagram the electrical connectors (example, AH1 to G) are shown looking on the mating face of each connector when they are disconnected.

The wire numbers and colours, where appropriate, are shown as an aid to identification whilst fault finding.

Before fault finding make sure that you understand how the electrical circuits work.

Earth Points

Faults may be caused by poor earth connections. Although earth connections are shown, it must be remembered that the cab assembly is earthed via further earth strap and cable connections. For details of these connections refer to ***Section C, Machine Earth Connections***.

Component Key:

The following key identifies the component connectors on the electrical diagram. Note that the wires coloured red show the electrical `live feed'. The wires coloured green show the electrical `return to earth'. For harness drawings refer to ***Section C, Harness Data***.

h1	Harness - Cab
h2	Harness - Auxiliary Hydraulics

Connectors (h1)

CCA	Fusebox A
CN	Hydraulic Speed Control (HSC) Relay
CP	Hammer Relay
DK	Hammer Selector Switch (3-position)
DL	Hydraclamp Selector Switch
DR1	Earth point
DR2	Earth point
DR3	Earth point
ET	Diode Gate
G	h1 - h2
X	To HSC Solenoid

Connectors (h2)

AH1	h2 - h1
AH2	Hammer Valve Solenoid
AH6	Foot Switch

Splices (h1)

SB

SC

SF

SH

SM

TH

Splices (h2)

SAH1

SAH2

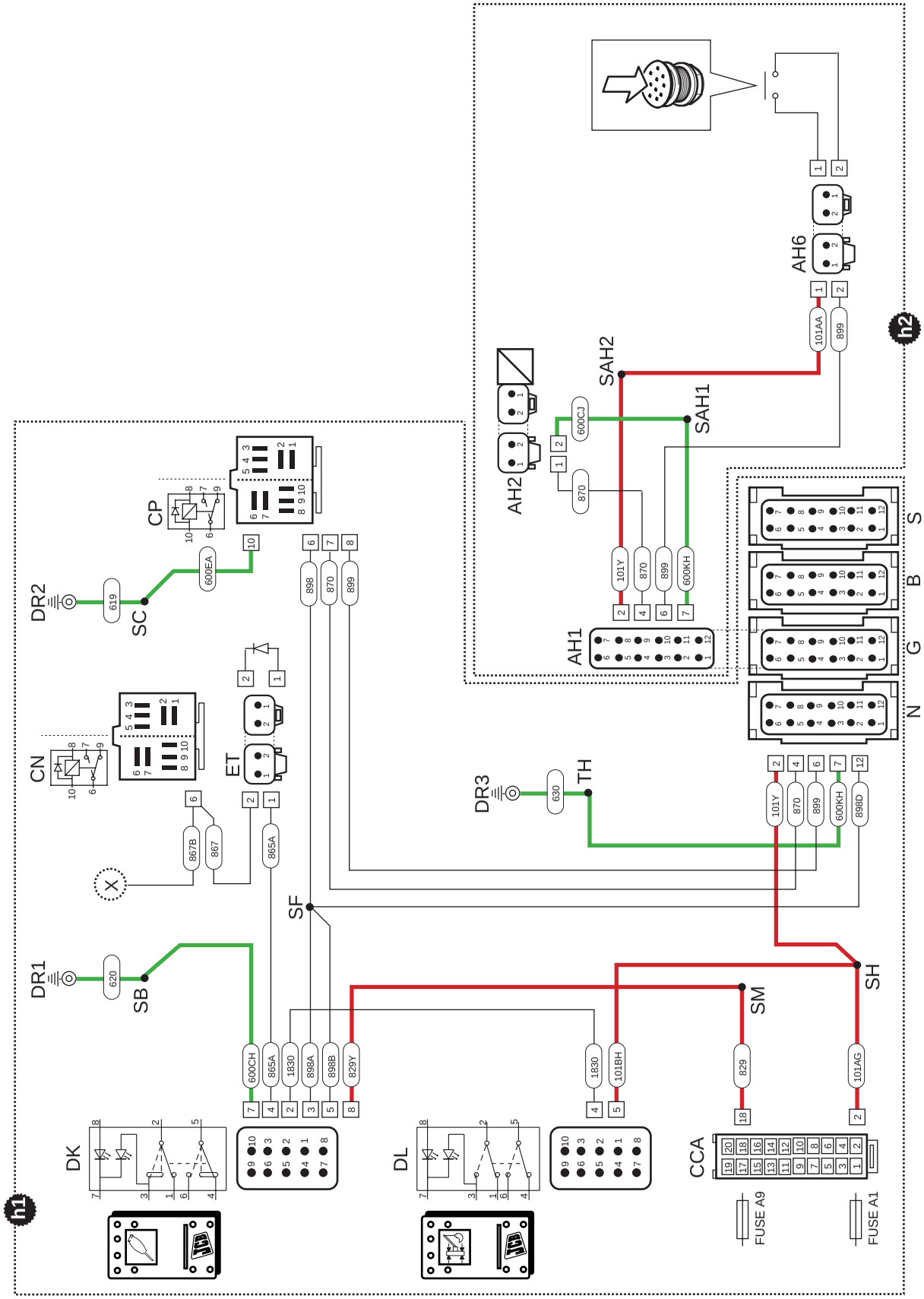

Fig 4. Gearpump Machines with Extending Dipper from September 2007

Variflow Machines

The rockbreaker circuit is activated by operating the auxiliary hydraulics selector switch in the side console, and then depressing the auxiliary footpedal in the cab.

Note: *On sideshift machines, the hydraclamps selector switch in the side console must also be in the `OFF' position (clamps engaged) before the rockbreaker can be operated.*

⇨ *Fig 5. (A-10)*. On the hi-flow rockbreaker circuit there are two hydraulic feed lines **F1** and **F2** to the rockbreaker attachment **9**.

The oil flow for the F1 feed is from the excavator valve auxiliary service. When the footpedal is depressed, the auxiliary spool in the excavator valve **3** directs the oil to the rockbreaker (Feed F1) through port B7.

The oil flow for the F2 feed is via a connection into the main hydraulic circuit. When the footpedal is depressed, a proximity switch (not shown) situated below the footpedal signals the rockbreaker solenoid valve **4** to energise, directing the oil flow from the main hydraulic circuit to the rockbreaker (Feed F2). Note that solenoid valve **5** is also energised simultaneously, and prevents the oil flow returning back to tank through the excavator valve.

The changeover solenoid valve **6** is energised when the auxiliary hydraulics selector switch in the side console is pressed. The valve isolates the hydraulic feed to the extending dipper ram **10** (head side) through port A1, and re-directs the flow to operate the rockbreaker through port B1. Consequently this also prevents the dipper from being extended during hammer operation.

Return oil from the rockbreaker attachment is routed directly back to tank. The return line incorporates an oil filter **7** and a small nitrogen charged accumulator **8**.

The accumulator smooths out any hydraulic pressure pulses that may be generated in the return line pipework by the rockbreaker attachment, and thereby protects the filter element from becoming damaged.

Electrical Circiut and Connections

The electrical circuit and connections details are the same as standard build gearpump machines.

Component Key:

1	Hydraulic Pump
2	Loader Valve Block
3	Excavator Valve Block (7 spool)
4	Solenoid Valve
5	Solenoid Valve
6	Solenoid Valve (hammer or ext. dipper changeover)
7	Filter Assembly
8	Accumulator
9	Rockbreaker
10	Extending Dipper Ram
11	Hydraulic Tank
F1	Feed Line 1
F2	Feed Line 2

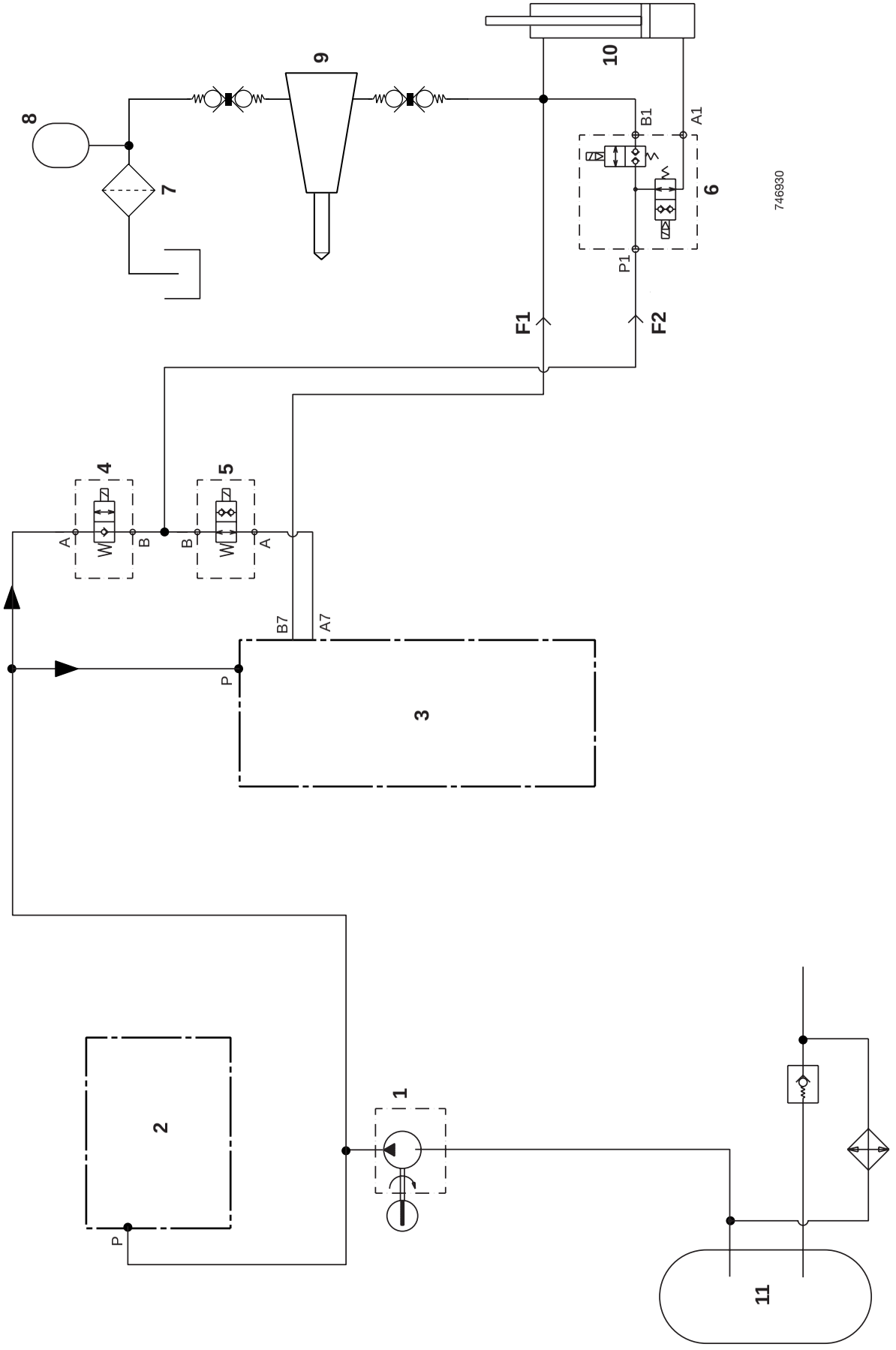

Fig 5. Variflow Machines

Precision Control (Servo) Machines

The rockbreaker circuit is activated by operating the auxiliary hydraulics selector switch in the side console, and then pressing the pushbutton on the excavator joystick.

Note: *On sideshift machines, the hydraclamps selector switch in the side console must also be in the `OFF' position (clamps engaged) before the rockbreaker can be operated.*

⇨ ***Fig 6. (A-12)***. On the hi-flow rockbreaker circuit there are two hydraulic feed lines **F1** and **F2** to the rockbreaker attachment **9**.

The oil flow for the F1 feed is from the excavator valve auxiliary service. Pressing the pushbutton on the excavator joystick signals the servo pilot pressure valve (not shown) via an electronic control unit (ECU). Servo pilot pressure moves the auxiliary spool in the excavator valve **6** to direct oil to the rockbreaker (Feed F1) through port B7.

The oil flow for the F2 feed is via a connection into the high pressure manifold block **3**. When the pushbutton on the excavator joystick is pressed, the rockbreaker solenoid valve **7** is energised. The valve connects the oil flow from the main hydraulic circuit to the rockbreaker (Feed F2) through port B1, and isolates the port A1, to prevent the oil flow returning back to tank through the excavator valve.

The changeover solenoid valve **8** is energised when the auxiliary hydraulics selector switch in the side console is pressed. The valve isolates the hydraulic feed to the extending dipper ram **10** (head side) through port A1, and re-directs the flow to operate the rockbreaker through port B1. Consequently this also prevents the dipper from being extended during rockbreaker operation.

Return oil from the rockbreaker attachment is routed directly back to tank.

To improve oil cooling in the hydraulic circuit, a small amount of the available flow is continually circulated through the oil cooler **11** during rockbreaker operation. When the pushbutton on the excavator joystick is pressed, the hi-flow cooling solenoid valve **5** is also energised. The valve opens to allow some oil to flow from the high pressure manifold block **3** into the return pipe manifold, and through the oil cooler back to tank. The volume of oil returning through the oil cooler is controlled by the flow regulator valve orifice **4**.

For details of the electrical circuit and connections. ⇨ ***Wires and Connectors (A-13)***.

Component Key:

1	Hydraulic Pump
2	Loader Valve Block
3	High Pressure Manifold
4	Flow Regulator Valve Orifice
5	Solenoid Valve (hi-flow cooling)
6	Excavator Valve Block (7 spool)
7	Solenoid Valve
8	Solenoid Valve (hammer or ext. dipper changeover)
9	Rockbreaker
10	Extending Dipper Ram
11	Oil Cooler
12	Hydraulic Tank
F1	Feed Line 1
F2	Feed Line 2

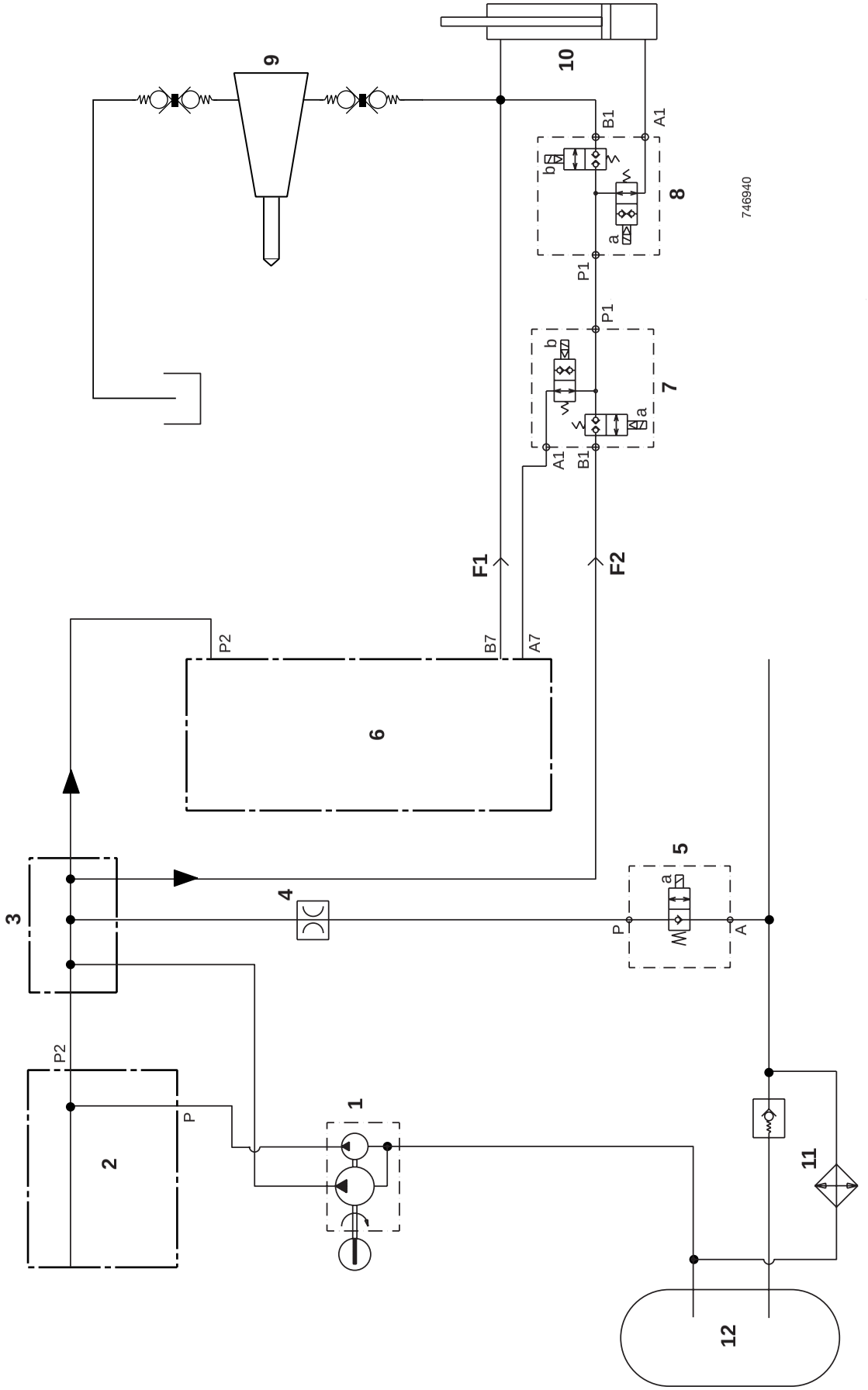

Fig 6. Precision Control (Servo) Machines

Wires and Connectors

⇨ *Fig 7. (A-14)*. On the electrical diagram the electrical connectors (example, CD to S) are shown looking on the mating face of each connector when they are disconnected.

The wire numbers and colours, where appropriate, are shown as an aid to identification whilst fault finding.

Before fault finding make sure that you understand how the electrical circuits work.

Earth Points

Faults may be caused by poor earth connections. Although earth connections are shown, it must be remembered that the cab assembly is earthed via further earth strap and cable connections. For details of these connections refer to ***Section C, Machine Earth Connections***.

Component Key:

The following key identifies the component connectors on the electrical diagram. Note that the wires coloured red show the electrical `live feed'. The wires coloured green show the electrical `return to earth'. For harness drawings refer to ***Section C, Harness Data***.

h1	Harness - Cab
h2	Harness - Seat
h3	Harness - Auxiliary Hydraulics
h4	Harness - Hammer Change-over (machines with extending dippers only)

Connectors (h1)

CCA	Fusebox A
CCD	Fusebox D
CP	Hammer Relay
DK	Auxiliary Hydraulics Selector Switch
DL	Hydraclamp Selector Switch
DR1	Earth point
DR2	Earth point
DR3	Earth point
EL	Auxiliary Change-over Relay
NK	Seat Connector h1 - h2
S	Steer mode h1 - h3
X	To PWM Controller (ECU)

Connectors (h2)

NA	h2 - h1
NE	Joystick LH

Connectors (h3)

CD	h3 - h1
CH	h3 - h4
CJ	Hi-flow Cooling Valve Solenoid
CS	Hammer Valve Solenoid
CT	Hammer Valve Solenoid

Connectors (h4)

HB	h4 - h3
HC	Change-over Valve Solenoid
HD	Change-over Valve Solenoid

Splices (h1)

SB

SC

SH

SM

TD

TH

Splices (h2)

SC

Splices (h3)

SA

SB

Splices (h4)

SA

SB

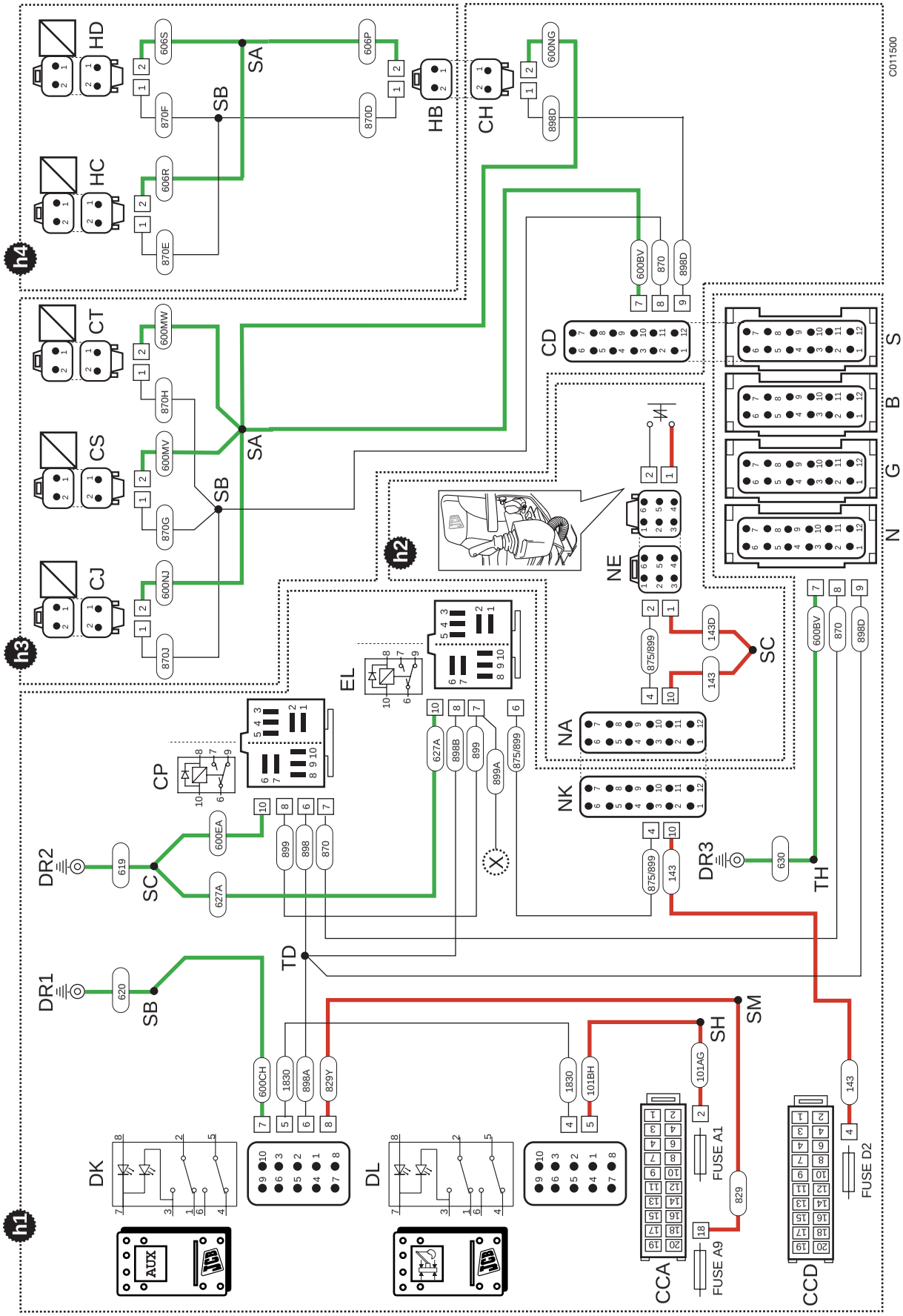

Fig 7. Precision Control (Servo) Machines

Connecting/Disconnecting Hydraulic Hoses

T4-004

Introduction

WARNING

Fluid Under Pressure

Fine jets of fluid at high pressure can penetrate the skin. Keep face and hands well clear of fluid under pressure and wear protective glasses and gloves. Hold a piece of cardboard close to suspected leaks and then inspect the cardboard for signs of fluid. If fluid penetrates your skin, get medical help immediately.

INT-3-1-10_3

WARNING

Hydraulic Pressure

Hydraulic fluid at system pressure can injure you. Before connecting or removing any hydraulic hose, residual hydraulic pressure trapped in the service hose line must be vented. Make sure the hose service line has been vented before connecting or removing hoses. Make sure the engine cannot be started while the hoses are open.

INT-3-1-11_2

Some attachments are hydraulically powered. The following procedures show how to connect and disconnect the hydraulic hoses safely.

Connecting the Hydraulic Hoses

1 Make the machine safe. Refer to ***Routine Maintenance, Prepare the Machine for Maintenance***.

2 Vent the hydraulic system. Refer to ***Routine Maintenance, Releasing the Hydraulic Pressure***.

3 If necessary, remove the blanking caps.

4 Check the hoses and adaptors for damage. Refer to ***Routine Maintenance, Checking for Damage***.

5 Connect the hoses.

If the hoses have quick releases couplings, refer to ***Quick Release Couplings***.

a Make sure that the hose is not twisted. Pressure applied to a twisted hose can cause the hose to fail or the connections to loosen.

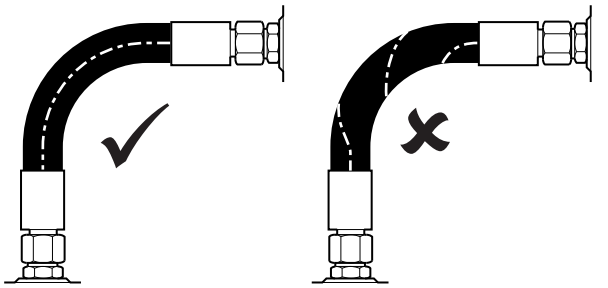

T037400

Fig 8.

b Make sure that the hose does not touch hot parts. High ambient temperatures can cause the hose to fail.

c Make sure that the hose does not touch parts which can rub or cause abrasion.

d Use the hose clamps (where possible) to support long hose runs and keep the hoses away from moving parts, etc.

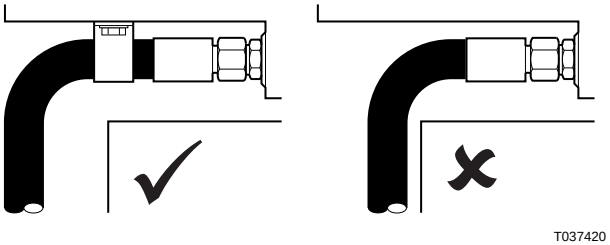

Fig 9.

To allow for length changes when the hose is pressurised, do not clamp at the bend. The curve absorbs the change.

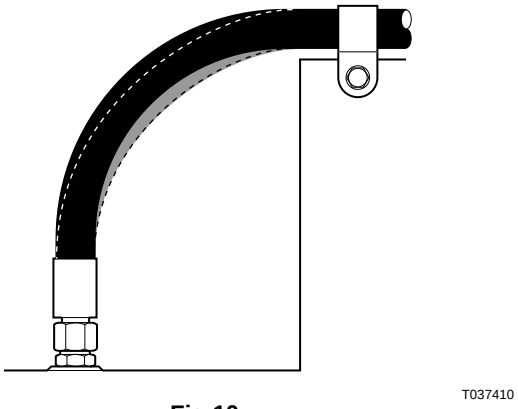

Fig 10.

6 Check for leaks.

a Start the engine.

b Operate the related control to increase the pressure in the hydraulic system.

c Stop the engine then remove the starter key.

d Check for indications of leakage at the hose connections. Correct, as necessary.

Disconnecting the Hydraulic Hoses

1 Make the machine safe. Refer to ***Routine Maintenance, Prepare the Machine for Maintenance***.

2 Vent the hydraulic system. Refer to ***Routine Maintenance, Releasing the Hydraulic Pressure***.

3 Disconnect the hoses.

If the hoses have quick releases couplings, then refer to ***Quick Release Couplings***.

4 Check the hoses and adaptors for damage. Refer to ***Routine Maintenance, Checking for Damage***.

5 If necessary, install the blanking caps

6 Check for leaks.

a Start the engine.

b Operate the related control to increase the pressure in the hydraulic system.

c Stop the engine then remove the starter key.

d Check for indications of leakage at the hose connections. Correct, as necessary.

Quick Release Couplings

Flat face quick release couplings allow the operator to remove and install attachments swiftly and efficiently. Generally, your machine pipework will be fitted with a female coupling **A** and a male coupling **B**. The optional attachment hoses will also be fitted with a female coupling **A** and a male coupling **B**. ⇨ *Fig 11. (A-18)*.

The quick release couplings should be trouble free and relatively easy to connect and disconnect, provided they are kept clean and used correctly. The recommendations listed below should always apply when using flat face quick release couplings.

Finally, please read the correct fitting and releasing procedures before you install or remove any optional attachment fitted with quick release couplings.

Quick Release Couplings - Do's and Don'ts

- Do wipe the two faces of the coupling and make sure they are clean before connecting.
- Do make sure the outside sleeve (female coupling) is pulled back when disconnecting.
- Do connect and disconnect a new coupling two or three times to 'work' the PTFE seals - sometimes a new coupling will stick if the seals have not been 'worked'.
- Do use a spanner on the hexagon flats of the coupling when fitting adaptors.
- Do use a rubber or hide hammer to disconnect a coupling if it sticks - sticking may occur if there is dirt present in the coupling.
- Don't attempt to re-connect a damaged half coupling - this will destroy the seals and necessitate replacing both half couplings.
- Don't leave the coupling where it may be run over by a machine or otherwise crushed - this will distort the coupling sleeve and prevent correct connection and disconnection.
- Don't clamp on the smooth diameter of the coupling when fitting adaptors - always use the hexagon.
- Don't try to turn the sleeve (female coupling) when the coupling has been disconnected - the locking ball will wedge underneath the sleeve and destroy the coupling.
- Don't damage the faces of the couplings - this can prevent connection and disconnection, or damage seals and cause leakage.
- Don't try to dismantle the couplings - they are non serviceable parts. If a coupling is damaged it should be replaced with a new one.

⚠ WARNING

The external surfaces of the couplings must be clean before connecting or disconnecting. Ingress of dirt will cause fluid leaks and difficulty in connecting or disconnecting. You could be killed or seriously injured by faulty Quick Release Couplings.

2-4-1-15

Before connecting or removing any hydraulic hose, residual hydraulic pressure trapped in the service hose line must be vented. Make sure the hose service line has been vented before connecting or removing hoses.

Connecting Quick Release Couplings

1 Remove any residual hydraulic pressure trapped in the service line hose.

2 Wipe the two faces of the male and female couplings and make sure they are clean.

3 Make sure that ball **C** in the female coupling is located in one of its slots.

4 Fit the male coupling into the female coupling.

5 Where applicable, rotate sleeve **E** half a turn and make sure that the locking ball **C** does not align with the slot **D**.

Disconnecting Quick Release Couplings

1 Remove any residual hydraulic pressure trapped in the service line hose.

2 Where applicable, align the slot **D** with ball **C**.

3 Pull back sleeve **E** to release the coupling.

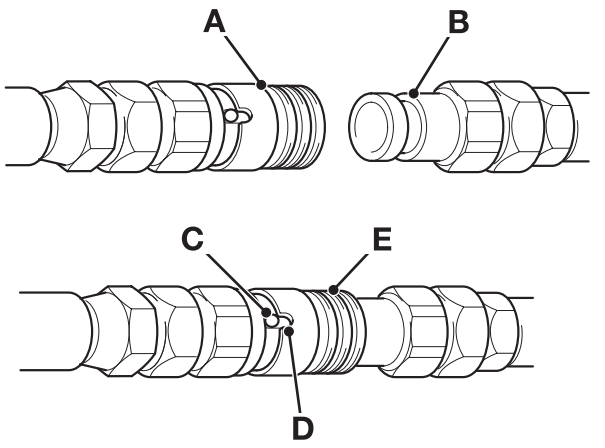

Fig 11.

Changing the Return Line Filter - if fitted

1 Make the machine safe. Refer to ***Routine Maintenance, Prepare the Machine for Maintenance***.

2 Vent the hydraulic system. Refer to ***Routine Maintenance, Releasing the Hydraulic Pressure***.

3 From underneath the machine, unscrew the filter element **A** and discard.

4 Smear the seal on the new filter element with hydraulic oil. Screw on the element until it touches the filter housing and then tighten a further half turn.

5 Run the engine and check for leaks.

Note: *Fit only a genuine supplied JCB filter, otherwise damage to the system may be incurred through contamination.*

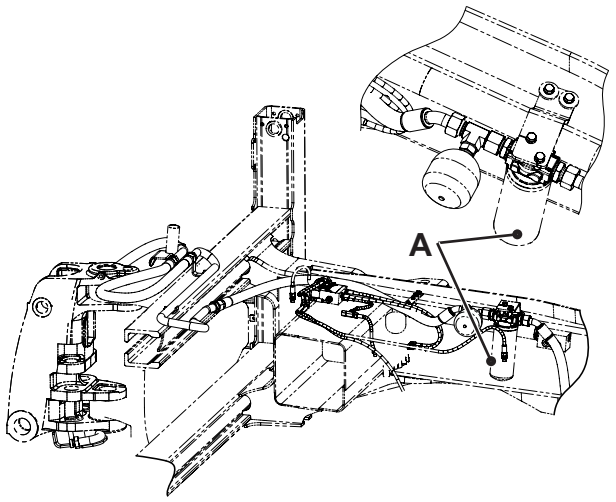

Fig 12.

Hydraulic Tool Circuit (HTC)

Operation Overview

Gearpump Machines with Extending Dipper

⇨ *Fig 13. (A-21)* and schematic circuit ⇨ *Fig 14. (A-22)*.

Oil from the hydraulic pump **1** enters the flow diverter valve **4** via the steer priority valve **2**. The flow diverter valve establishes a priority (and controlled) flow to the hydraulic tool circuit (HTC).

If the hydraulic tool circuit (HTC) has not been selected, the oil passes from the flow diverter valve bypass port **B** to the auxiliary valve **6** and then to the loader valve **3**. From the loader valve, the oil passes to the excavator valve **5** along the high pressure carry-over line **HPCO**. From the excavator valve the oil returns to the hydraulic tank **7** via an in-line filter (not shown).

When the hydraulic tool circuit (HTC) is selected, the solenoid at the flow diverter valve **4** is energised, the flow of oil through the valve is directed through the regulated port **R** to the `tool feed' quick release coupling **8**. The return oil from the `tool return' quick release coupling **9** is routed directly back to tank via hose **C**. Note that the flow of oil from port **R** is regulated regardless of changes in load pressure or pump flow. Any excess flow (over 20 litres/min) is directed to port **B** and is available for operation of other services e.g. loader valve.

The flow diverter valve **4** incorporates a relief valve. When the pressure in the regulated port **R** exceeds the setting of the relief valve oil flow is exhausted directly back to tank via hose **D**.

For details of the electrical circuit and connections, ⇨ *Electrical Connections (A-23)*.

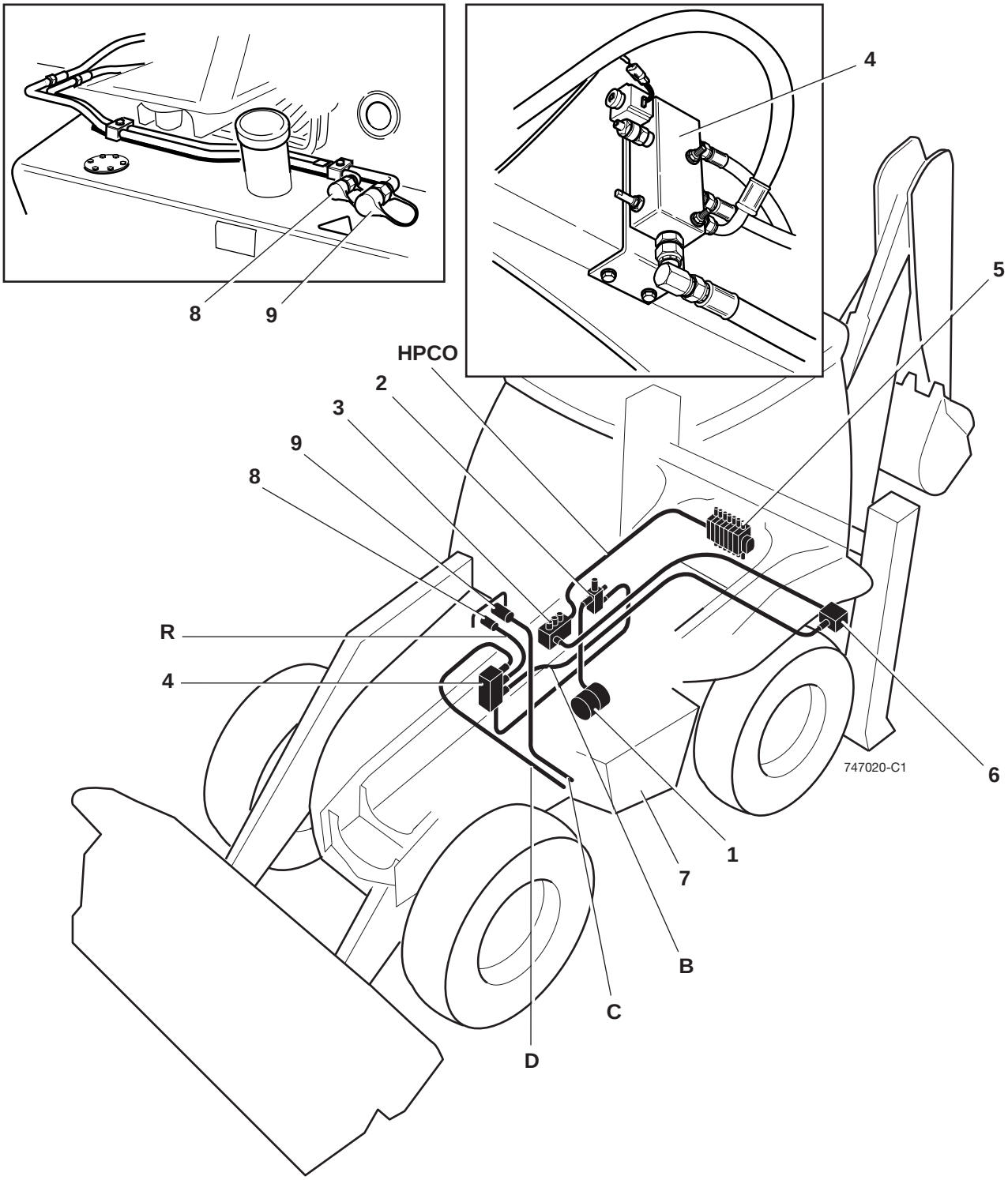

Fig 13. Component Location

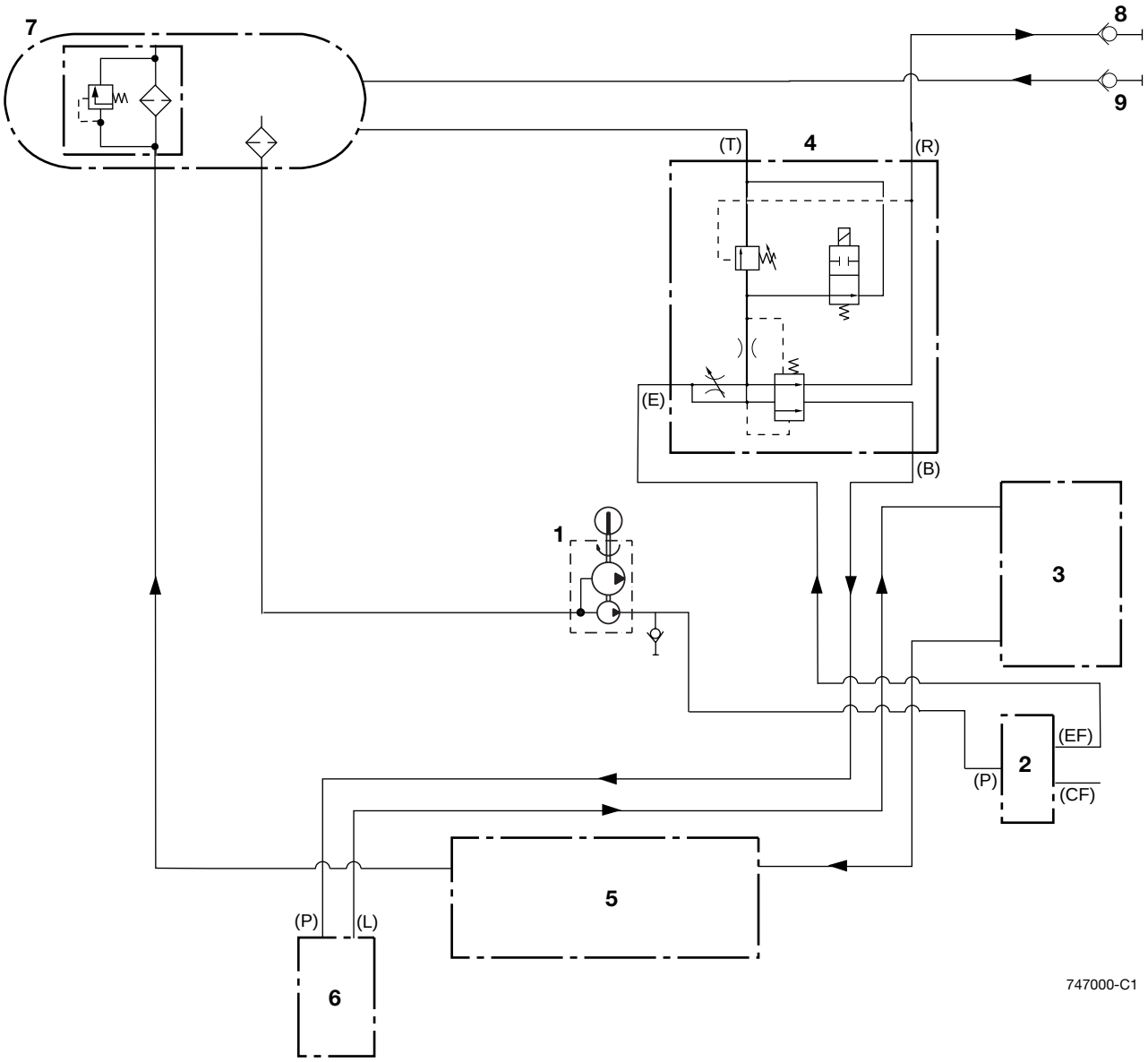

Fig 14. Schematic Circuit

Component Key:

1 Hydraulic Pump
2 Steer Priority Valve
3 Loader Valve Block
4 Flow Diverter Valve
5 Excavator Valve Block (6 spool)
6 Auxiliary Valve (extending dipper)
7 Hydraulic Tank
8 `Tool Feed' Quick Release Coupling
9 `Tool Return' Quick Release Coupling

Electrical Connections

NOT Servo Machines

⇨ ***Fig 15. (A-24)***. On the electrical diagram the electrical connectors (example, CA to G) are shown looking on the mating face of each connector when they are disconnected.

The wire numbers and colours, where appropriate, are shown as an aid to identification whilst fault finding.

Before fault finding make sure that you understand how the electrical circuits work.

Earth Points

Faults may be caused by poor earth connections. Although earth connections are shown, it must be remembered that the cab assembly is earthed via further earth strap and cable connections. For details of these connections refer to ***Section C, Machine Earth Connections***.

Component Key:

The following key identifies the component connectors on the electrical diagram. Note that the wires coloured red show the electrical `live feed'. The wires coloured green show the electrical `return to earth'. For harness drawings refer to ***Section C, Harness Data***.

h1	Harness - Cab
h2	Harness - Solenoid Valve Link
h3	Harness - Switch Link

Connectors (h1)

CCA	Fusebox A
DR2	Earth point
DR3	Earth point
EU	h1 - h3
G	h1 - h2

Connectors (h2)

CA	h2 - h1
CC	HTC Valve Solenoid

Connectors (h3)

HA	HTC and Quickhitch Selector Switch
HC	h3 - h1

Splices (h1)

SC

SK

SH

TH

Splices (h2)

SA

Splices (h3)

SA

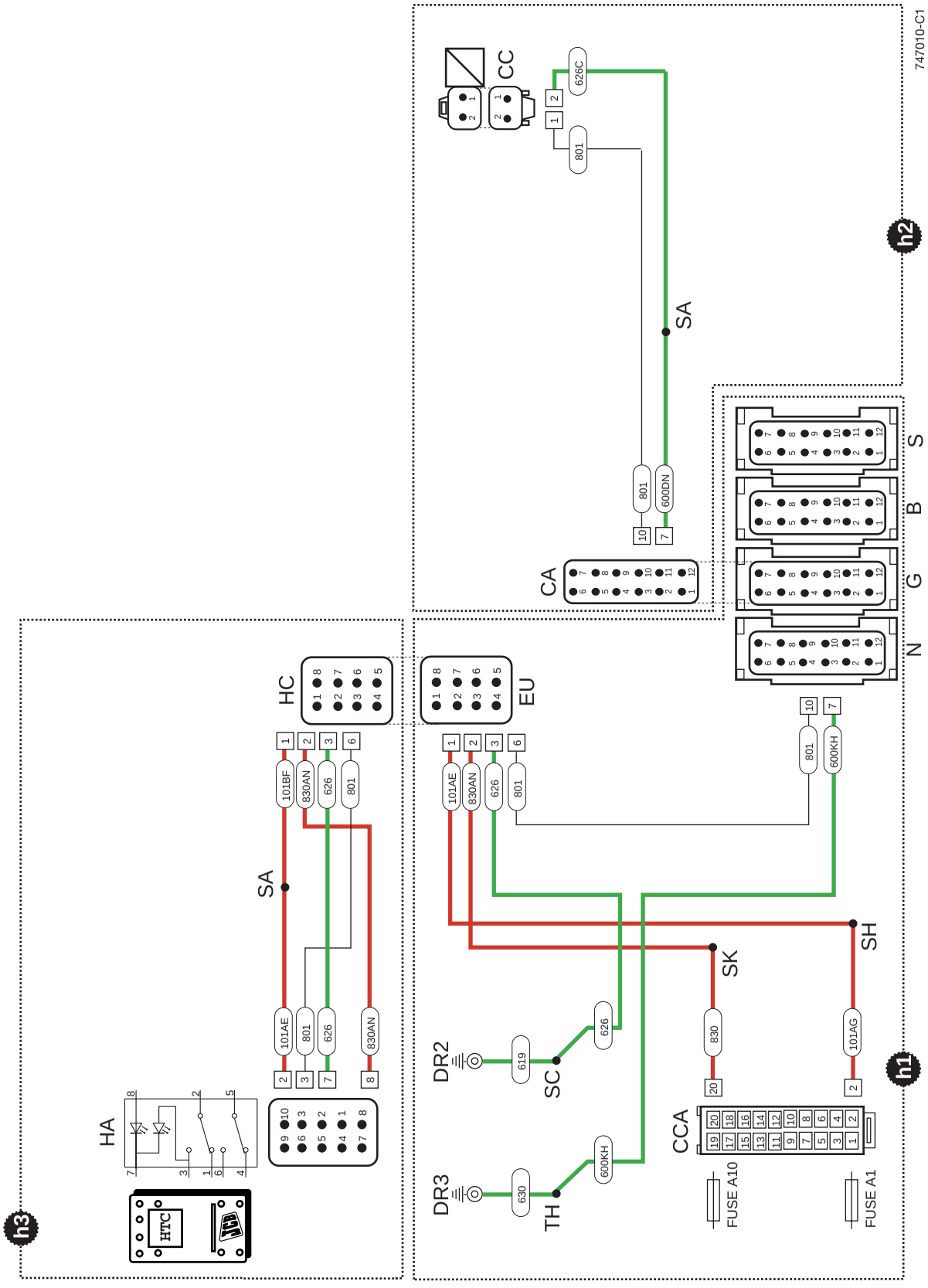

Fig 15. NOT Servo Machines

Precision Control (Servo) Machines

⇒ *Fig 16. (A-26)*. On the electrical diagram the electrical connectors (example, CB to G) are shown looking on the mating face of each connector when they are disconnected.

The wire numbers and colours, where appropriate, are shown as an aid to identification whilst fault finding.

Before fault finding make sure that you understand how the electrical circuits work.

Earth Points

Faults may be caused by poor earth connections. Although earth connections are shown, it must be remembered that the cab assembly is earthed via further earth strap and cable connections. For details of these connections refer to ***Section C, Machine Earth Connections***.

Component Key:

The following key identifies the component connectors on the electrical diagram. Note that the wires coloured red show the electrical `live feed'. The wires coloured green show the electrical `return to earth'. For harness drawings refer to ***Section C, Harness Data***.

h1	Harness - Cab
h2	Harness - Auxiliary Hydraulics
h3	Harness - Solenoid Valve Link
h4	Harness - Switch Link

Connectors (h1)

CCA	Fusebox A
DR2	Earth point
DR3	Earth point
EU	h1 - h4
G	h1 - h2

Connectors (h2)

CB	h2 - h1
CA	h2 - h3

Connectors (h3)

CA	h3 - h2
CC	HTC Valve Solenoid

Connectors (h4

HA	HTC and Quickhitch Selector Switch
HC	h4 - h1

Splices (h1)

SC

SK

SH

TH

Splices (h2)

SA

Splices (h3

SA

Splices (h4

SA

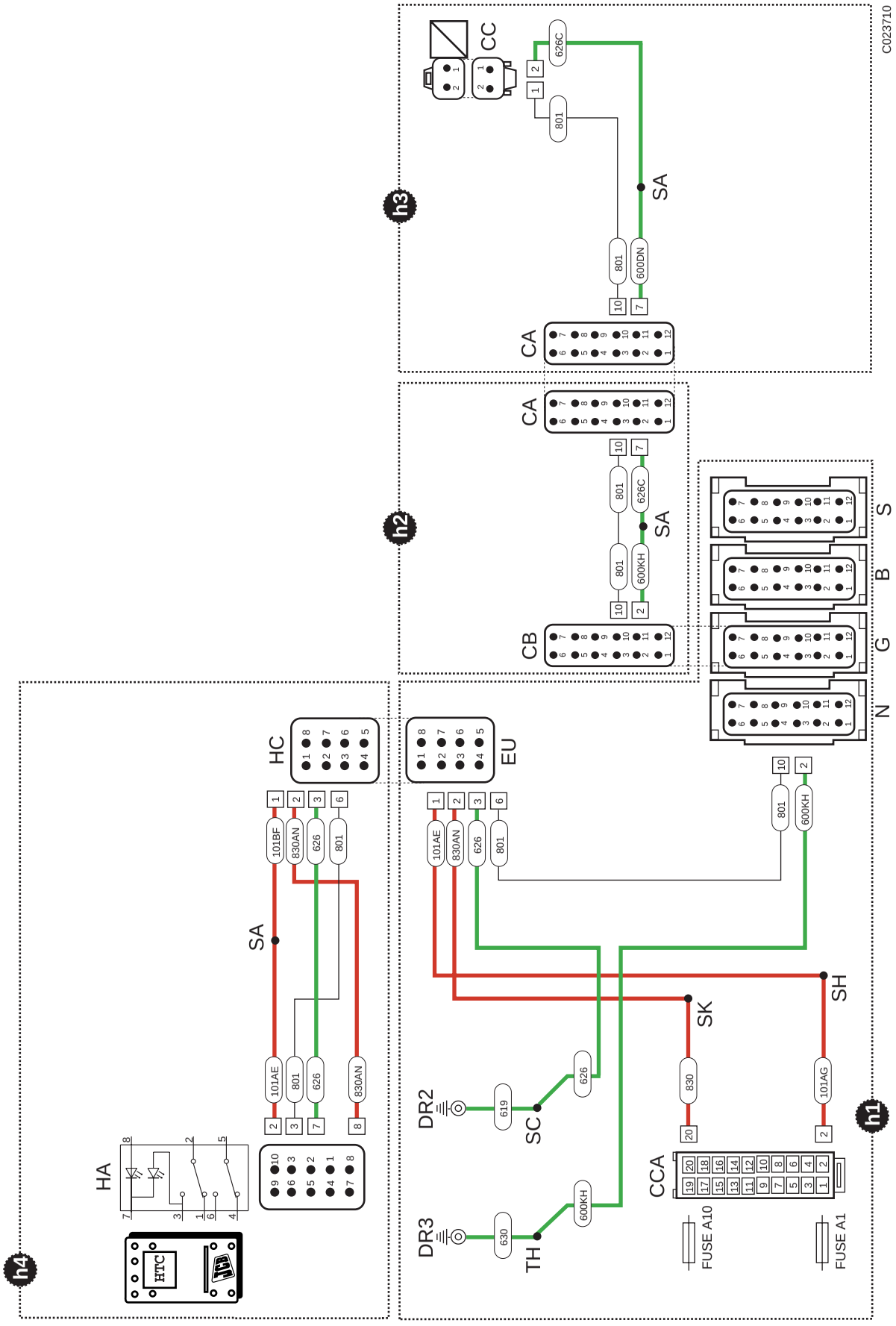

Fig 16. Precision Control (Servo) Machines

Connecting/Disconnecting Hydraulic Hoses

T4-004

Introduction

WARNING

Fluid Under Pressure

Fine jets of fluid at high pressure can penetrate the skin. Keep face and hands well clear of fluid under pressure and wear protective glasses and gloves. Hold a piece of cardboard close to suspected leaks and then inspect the cardboard for signs of fluid. If fluid penetrates your skin, get medical help immediately.

INT-3-1-10_3

WARNING

Hydraulic Pressure

Hydraulic fluid at system pressure can injure you. Before connecting or removing any hydraulic hose, residual hydraulic pressure trapped in the service hose line must be vented. Make sure the hose service line has been vented before connecting or removing hoses. Make sure the engine cannot be started while the hoses are open.

INT-3-1-11_2

Some attachments are hydraulically powered. The following procedures show how to connect and disconnect the hydraulic hoses safely.

Connecting the Hydraulic Hoses

1 Make the machine safe. Refer to ***Routine Maintenance, Prepare the Machine for Maintenance***.

2 Vent the hydraulic system. Refer to ***Routine Maintenance, Releasing the Hydraulic Pressure***.

3 If necessary, remove the blanking caps.

4 Check the hoses and adaptors for damage. Refer to ***Routine Maintenance, Checking for Damage***.

5 Connect the hoses.

If the hoses have quick releases couplings, refer to ***Quick Release Couplings***.

a Make sure that the hose is not twisted. Pressure applied to a twisted hose can cause the hose to fail or the connections to loosen.

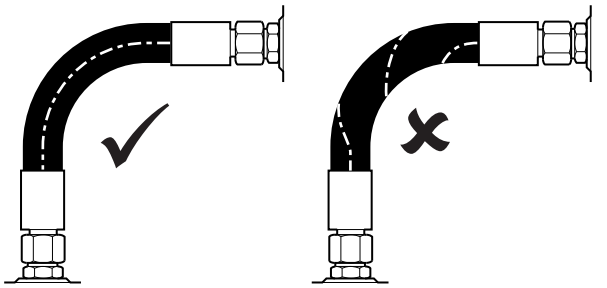

T037400

Fig 17.

b Make sure that the hose does not touch hot parts. High ambient temperatures can cause the hose to fail.

c Make sure that the hose does not touch parts which can rub or cause abrasion.

d Use the hose clamps (where possible) to support long hose runs and keep the hoses away from moving parts, etc.

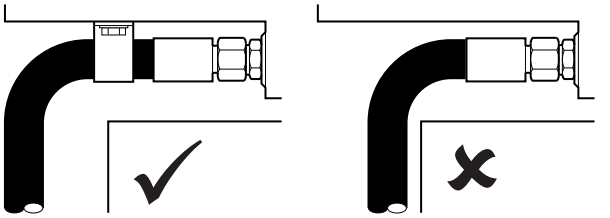

Fig 18.

To allow for length changes when the hose is pressurised, do not clamp at the bend. The curve absorbs the change.

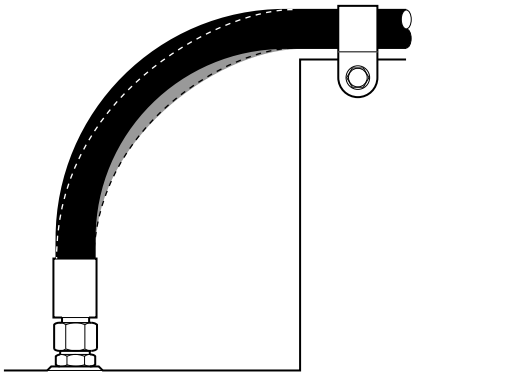

Fig 19.

6 Check for leaks.

a Start the engine.

b Operate the related control to increase the pressure in the hydraulic system.

c Stop the engine then remove the starter key.

d Check for indications of leakage at the hose connections. Correct, as necessary.

Disconnecting the Hydraulic Hoses

1 Make the machine safe. Refer to ***Routine Maintenance, Prepare the Machine for Maintenance***.

2 Vent the hydraulic system. Refer to ***Routine Maintenance, Releasing the Hydraulic Pressure***.

3 Disconnect the hoses.

If the hoses have quick releases couplings, then refer to ***Quick Release Couplings***.

4 Check the hoses and adaptors for damage. Refer to ***Routine Maintenance, Checking for Damage***.

5 If necessary, install the blanking caps

6 Check for leaks.

a Start the engine.

b Operate the related control to increase the pressure in the hydraulic system.

c Stop the engine then remove the starter key.

d Check for indications of leakage at the hose connections. Correct, as necessary.

Quick Release Couplings

Flat face quick release couplings allow the operator to remove and install attachments swiftly and efficiently. Generally, your machine pipework will be fitted with a female coupling **A** and a male coupling **B**. The optional attachment hoses will also be fitted with a female coupling **A** and a male coupling **B**. ⇨ *Fig 20. (A-30)*.

The quick release couplings should be trouble free and relatively easy to connect and disconnect, provided they are kept clean and used correctly. The recommendations listed below should always apply when using flat face quick release couplings.

Finally, please read the correct fitting and releasing procedures before you install or remove any optional attachment fitted with quick release couplings.

Quick Release Couplings - Do's and Don'ts

- Do wipe the two faces of the coupling and make sure they are clean before connecting.
- Do make sure the outside sleeve (female coupling) is pulled back when disconnecting.
- Do connect and disconnect a new coupling two or three times to 'work' the PTFE seals - sometimes a new coupling will stick if the seals have not been 'worked'.
- Do use a spanner on the hexagon flats of the coupling when fitting adaptors.
- Do use a rubber or hide hammer to disconnect a coupling if it sticks - sticking may occur if there is dirt present in the coupling.
- Don't attempt to re-connect a damaged half coupling - this will destroy the seals and necessitate replacing both half couplings.
- Don't leave the coupling where it may be run over by a machine or otherwise crushed - this will distort the coupling sleeve and prevent correct connection and disconnection.
- Don't clamp on the smooth diameter of the coupling when fitting adaptors - always use the hexagon.
- Don't try to turn the sleeve (female coupling) when the coupling has been disconnected - the locking ball will wedge underneath the sleeve and destroy the coupling.
- Don't damage the faces of the couplings - this can prevent connection and disconnection, or damage seals and cause leakage.
- Don't try to dismantle the couplings - they are non serviceable parts. If a coupling is damaged it should be replaced with a new one.

⚠ WARNING

The external surfaces of the couplings must be clean before connecting or disconnecting. Ingress of dirt will cause fluid leaks and difficulty in connecting or disconnecting. You could be killed or seriously injured by faulty Quick Release Couplings.

2-4-1-15

Before connecting or removing any hydraulic hose, residual hydraulic pressure trapped in the service hose line must be vented. Make sure the hose service line has been vented before connecting or removing hoses.

Connecting Quick Release Couplings

1 Remove any residual hydraulic pressure trapped in the service line hose.

2 Wipe the two faces of the male and female couplings and make sure they are clean.

3 Make sure that ball **C** in the female coupling is located in one of its slots.

4 Fit the male coupling into the female coupling.

5 Where applicable, rotate sleeve **E** half a turn and make sure that the locking ball **C** does not align with the slot **D**.

Disconnecting Quick Release Couplings

1 Remove any residual hydraulic pressure trapped in the service line hose.

2 Where applicable, align the slot **D** with ball **C**.

3 Pull back sleeve **E** to release the coupling.

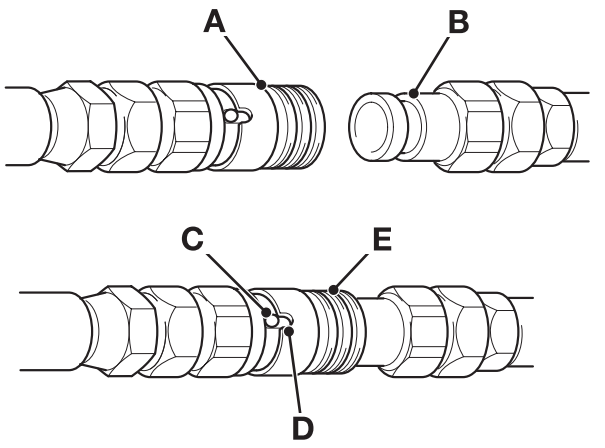

Fig 20.

Flow Diverter Valve

Removal and Replacement

⚠ WARNING

Make the machine safe before working underneath it. Park the machine on level ground, lower the attachments to the ground. Apply the park brake, put the transmission in neutral and stop the engine. Block both sides of all four wheels.

Disconnect the battery, to prevent the engine being started while you are beneath the machine.

GEN-4-1_1

Removal

⇨ *Fig 21. (A-32)*.

1 Park the machine on firm level ground, engage the parking brake and set the transmission to neutral. Lower the backhoe and loader end to the ground and stop the engine.

2 Operate the loader control levers back and forth to vent residual hydraulic pressure.

3 Disconnect all hydraulic hoses from the valve block and plug all ports to prevent ingress of dirt. Label each hose before disconnecting, this will ensure correct re-fitting.

4 Uncouple the harness electrical connector **A** at the solenoid.

5 Take hold of the valve assembly, loosen and remove the fixing bolts **B** securing the valve to the chassis. Lift the valve assembly from the machine.

Replacement

Replacement is the reverse of removal.

1 Make sure that the hoses are correctly installed. The hose connections from the flow diverter valve are as follows:

Port **E** - to steer priority valve

Port **R** - to HTC quick release coupling (Tool Feed)

Port **B** - to auxiliary valve (Extending Dipper)

Port **T** - to hydraulic tank

Note: *The flow diverter valve ports should be stamped 'E', 'R', 'B' and 'T'.*

2 After replacement check the flow setting and the relief valve pressure setting, ⇨ *Flow and Pressure Testing (A-35)*.

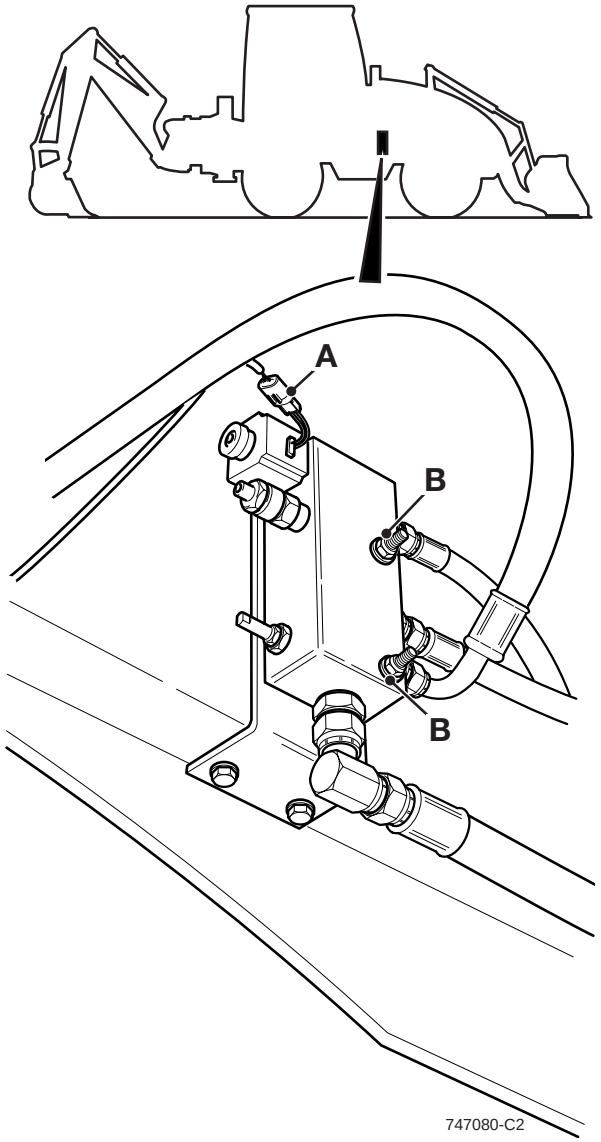

Fig 21. Flow Diverter Valve

Dismantle and Assemble

Dismantle

⇒ Fig 22. (A-34). The numerical sequence shown on the illustration is intended as a guide to dismantling.

Assemble

Assembly is the reverse of dismantling.

1 Clean the valve components in an appropriate solvent.

2 Renew all seals and `O' rings.

3 Lubricate parts with JCB Special Hydraulic Fluid before assembling. Make sure that all the parts move freely.

4 After assembly make sure that the valve is set for the correct flow and pressure, *⇒ Flow and Pressure Testing (A-35)*.

Table 1. Torque Settings

Item	Nm	kgf m	lbf ft
4	30	3.0	22
22	45	4.6	33

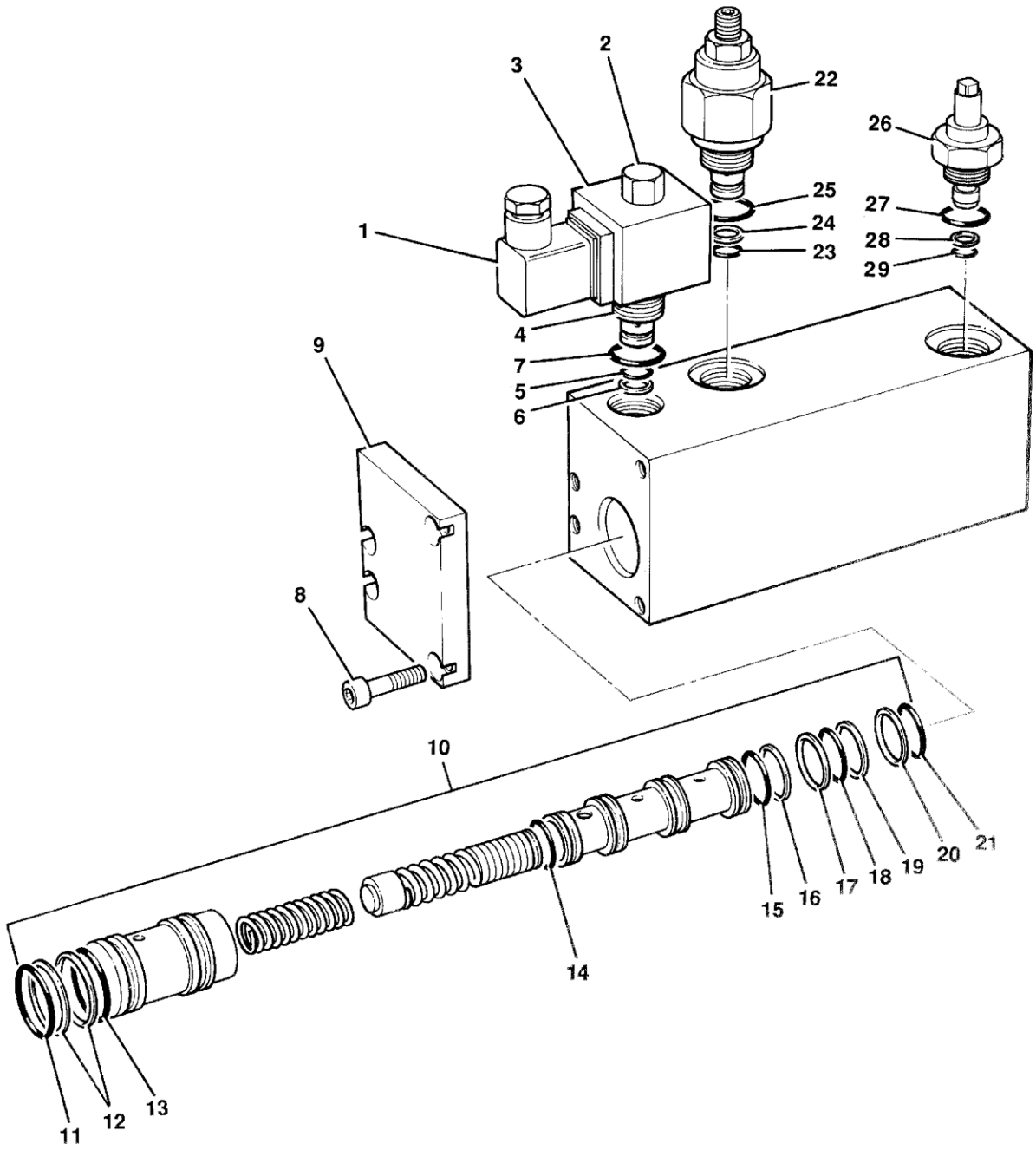

Fig 22. Flow Diverter Valve

Flow and Pressure Testing

⇨ *Fig 23. (A-36)*.

Before a hand tool is connected to the hydraulic tool circuit, the circuit flow and pressure settings must be checked and adjusted. The hydraulic tool circuit is designed to operate Class C hand tools (tools operating at 138 bar and an oil flow of 20 litres/min).

⚠ WARNING

Hydraulic Pressure

Hydraulic fluid at system pressure can injure you. Before connecting or removing any hydraulic hose, residual hydraulic pressure trapped in the service hose line must be vented. Make sure the hose service line has been vented before connecting or removing hoses. Make sure the engine cannot be started while the hoses are open.

INT-3-1-11_2

⚠ WARNING

Fluid Under Pressure

Fine jets of fluid at high pressure can penetrate the skin. Keep face and hands well clear of fluid under pressure and wear protective glasses. Hold a piece of cardboard close to suspected leaks and then inspect the cardboard for signs of fluid. If fluid penetrates your skin, get medical help immediately.

INT-3-1-10_2

Prepare the Machine

1 Park the machine on firm level ground, engage the parking brake and set the transmission to neutral. Lower the backhoe and loader end to the ground and stop the engine.

2 Operate the loader control levers back and forth to vent residual hydraulic pressure.

Flow Testing

1 Connect a suitable pressure gauge, flow meter and flow restrictor valve across the `tool feed' and `tool return' quick release couplings on the machine as shown at **A**. For reference, items are identified as:

X - Pressure Gauge

Y - Flow Meter

Z - Flow Restrictor Valve

Important: *Make sure that the flow restrictor valve **Z** is fully OPEN (the adjusting knob screwed fully out) before starting the engine.*

2 Start the engine and set the R.P.M. to 1500.

3 Enable the HTC circuit, i.e. press the HTC switch **B** to the 'ON' position.

4 Note the flow meter reading, the valve should be set at 20 litres/min. If adjustment is required, loosen locknut **C** and turn adjusting screw **D** until the correct flow is obtained.

Pressure Testing

1 Use the flow restrictor valve to pressurise the circuit. As the pressure rises watch the flow reading, it should start to fall when the pressure reaches 138 bar (140.6 kgf/cm^2, 2000 lbf/in^2).

2 If adjustment is required, loosen locknut **E** and turn adjusting screw **F** until the correct pressure is obtained.

3 Stop the engine, vent residual pressure and remove the pressure gauge, flow meter and flow restrictor valve.

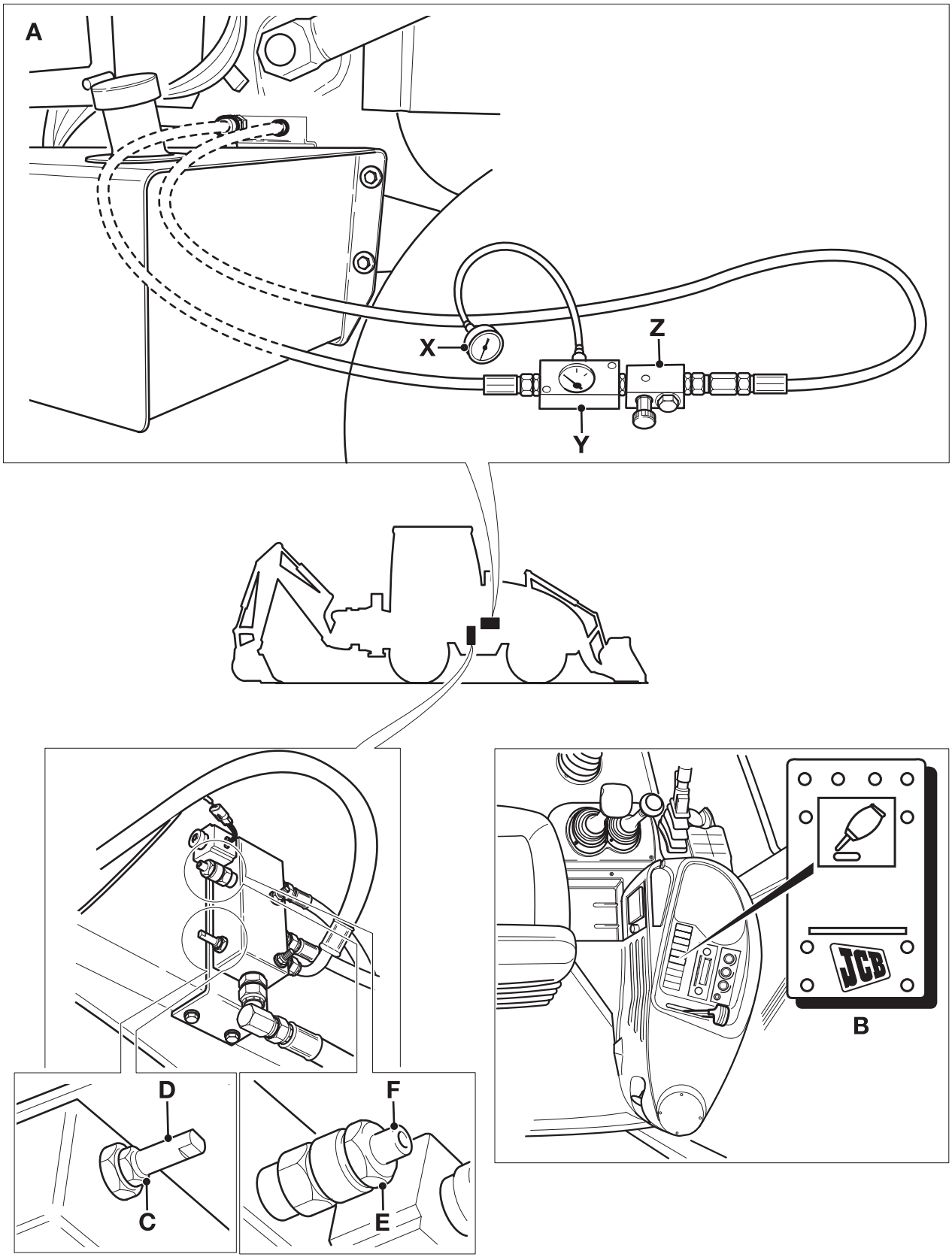

Fig 23. Flow and Pressure Testing

3 Point Hitch (214e Landscaper)

Removal and Replacement

Control Valve

WARNING

Hydraulic Pressure

Hydraulic fluid at system pressure can injure you. Before connecting or removing any hydraulic hose, residual hydraulic pressure trapped in the service hose line must be vented. Make sure the hose service line has been vented before connecting or removing hoses. Make sure the engine cannot be started while the hoses are open.

INT-3-1-11_2

⇒ *Fig 24. (A-38)*.

Removal

1 Switch OFF the engine and remove the starter key. Operate the valve control levers back and forth to vent any residual hydraulic pressure.

2 Remove the control lever knobs **A**. Undo screws **B** and lift the side console instrument panel to one side. It should be possible to remove the valve block without disconnecting the panel. If the panel has to be removed for any reason, disconnect the hand throttle lever at **C** and the electrical connections to the panel switches.

3 Disconnect the hydraulic hoses from the valve block and plug all the open ports to prevent the ingress of dirt. Label each hose before disconnecting, this will ensure correct re-fitting.

4 Loosen nuts **D**, do not completely remove the retaining nuts.

WARNING

This component is heavy. It must only be removed or handled using a suitable lifting method and device.

BF-4-1_1

5 Wrap a suitable sling around the valve, make sure that the weight of the valve is securely supported by the sling.

6 Remove the nuts **D** and carefully lift the valve assembly from the machine.

Replacement

Replacement is the reversal of the removal sequence.

WARNING

Fluid Under Pressure

Fine jets of fluid at high pressure can penetrate the skin. Keep face and hands well clear of fluid under pressure and wear protective glasses. Hold a piece of cardboard close to suspected leaks and then inspect the cardboard for signs of fluid. If fluid penetrates your skin, get medical help immediately.

INT-3-1-10_2

1 Make sure that the hoses are correctly installed. Hoses and pipes must be reconnected and phased in position as prior to removal.

2 After replacement, check the auxiliary relief valve (ARV) pressure settings. ***Section E - Hydraulics.***

Note: *All hydraulic adaptors that are installed together with a bonded washer, must also have JCB Threadseal applied to the threads of the adaptor prior to installation.*

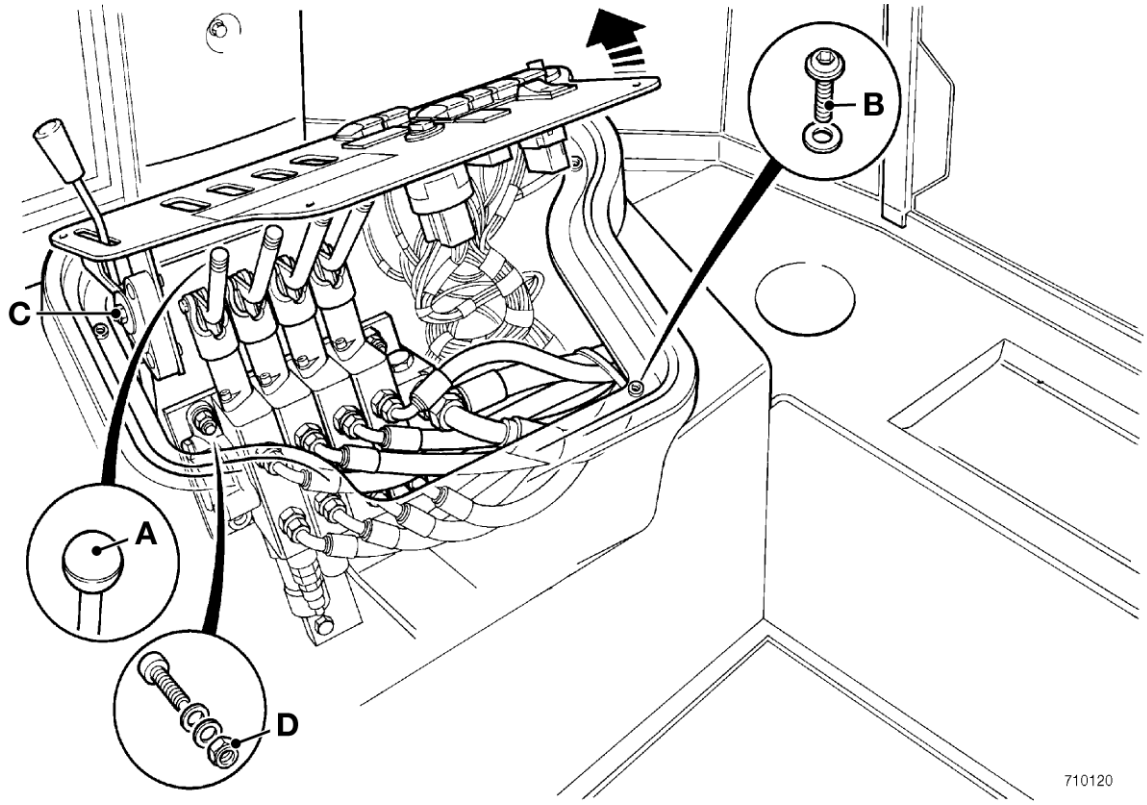

Fig 24. 3 Point Hitch Control Valve

Operating Rams

⚠ WARNING

Hydraulic Pressure

Hydraulic fluid at system pressure can injure you. Before connecting or removing any hydraulic hose, residual hydraulic pressure trapped in the service hose line must be vented. Make sure the hose service line has been vented before connecting or removing hoses. Make sure the engine cannot be started while the hoses are open.

INT-3-1-11_2

⇨ *Fig 25. (A-40)*.

Removal

1 Remove any attachments fitted to the hitch. Park the machine on firm level ground, engage the parking brake and lower the hitch.

2 Switch OFF the engine and remove the starter key. Operate the valve control levers back and forth to vent residual hydraulic pressure.

3 Disconnect the hydraulic hoses from the ram being removed. Plug all ports to prevent ingress of dirt. Label each hose before disconnecting, this will ensure correct re-fitting.

⚠ WARNING

This component is heavy. It must only be removed or handled using a suitable lifting method and device.

BF-4-1_1

4 Wrap a suitable sling around the ram being removed, make sure that the weight of the ram is supported by the sling.

5 Remove the pivot pins as shown and carefully lift the ram assembly from the machine:

- **a** To remove the lift ram **A**, undo nuts **B**, remove bolts **C** and pivot pins **D**.
- **b** To remove the pitch ram **E**, undo nut **F**, remove bolt **G** and pivot pin **H**.
- **c** To remove the tilt ram **J**, undo nuts **K**, remove bolts **L** and pivot pins **M**. Retrieve the washers **P** fitted to the bottom pivot

Replacement

Replacement is a reversal of the removal sequence.

1 Make sure that all pivot bores and pivot pins are clean and greased when assembling. When fully assembled, apply grease at each grease nipple before operating the machine.

⚠ WARNING

Fluid Under Pressure

Fine jets of fluid at high pressure can penetrate the skin. Keep face and hands well clear of fluid under pressure and wear protective glasses. Hold a piece of cardboard close to suspected leaks and then inspect the cardboard for signs of fluid. If fluid penetrates your skin, get medical help immediately.

INT-3-1-10_2

2 Make sure that the hoses are correctly installed. Hoses and pipes must be reconnected and phased in the same position as prior to removal.

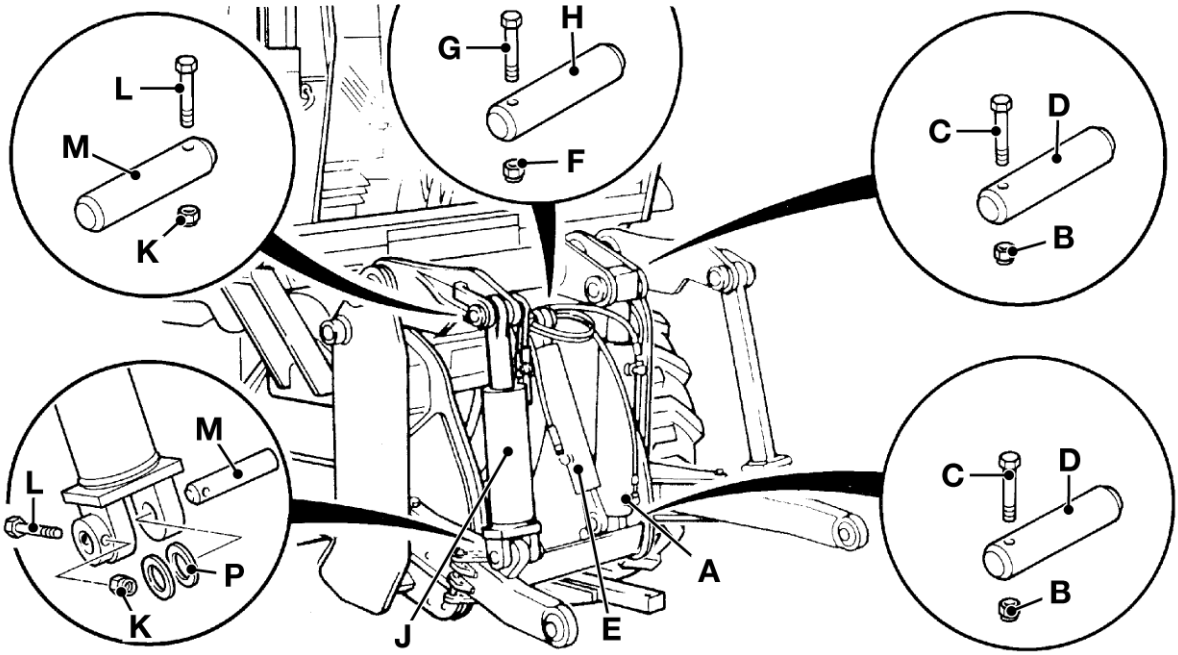

Fig 25. 3 Point Hitch Rams